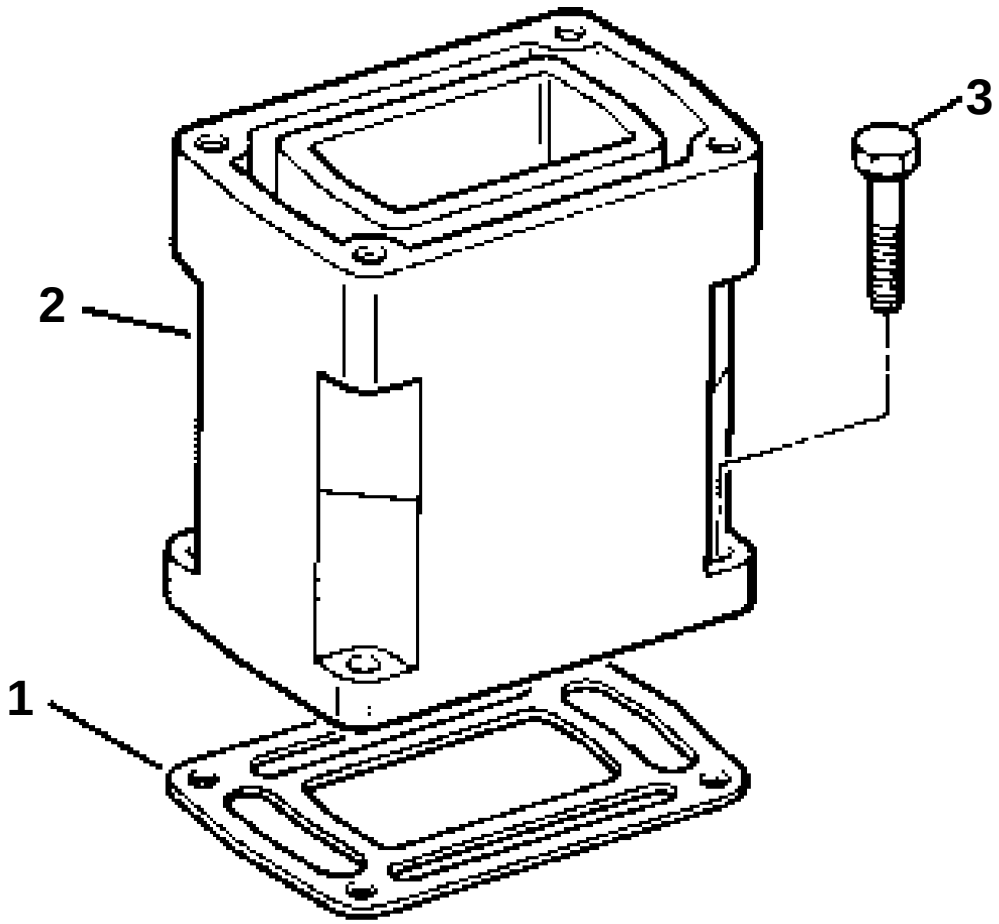
3
2
1

EXTENSION KIT

REF	PART NO.	QTY	DESCRIPTION	NOTES
	3850498	1	Extension kit	4.3, 5.0, 5.7, 5.8, 7.4, 8.2
1	956584	8	· Screw	
2	3850496	4	· Gasket	
3	3853621	2	· Extension	